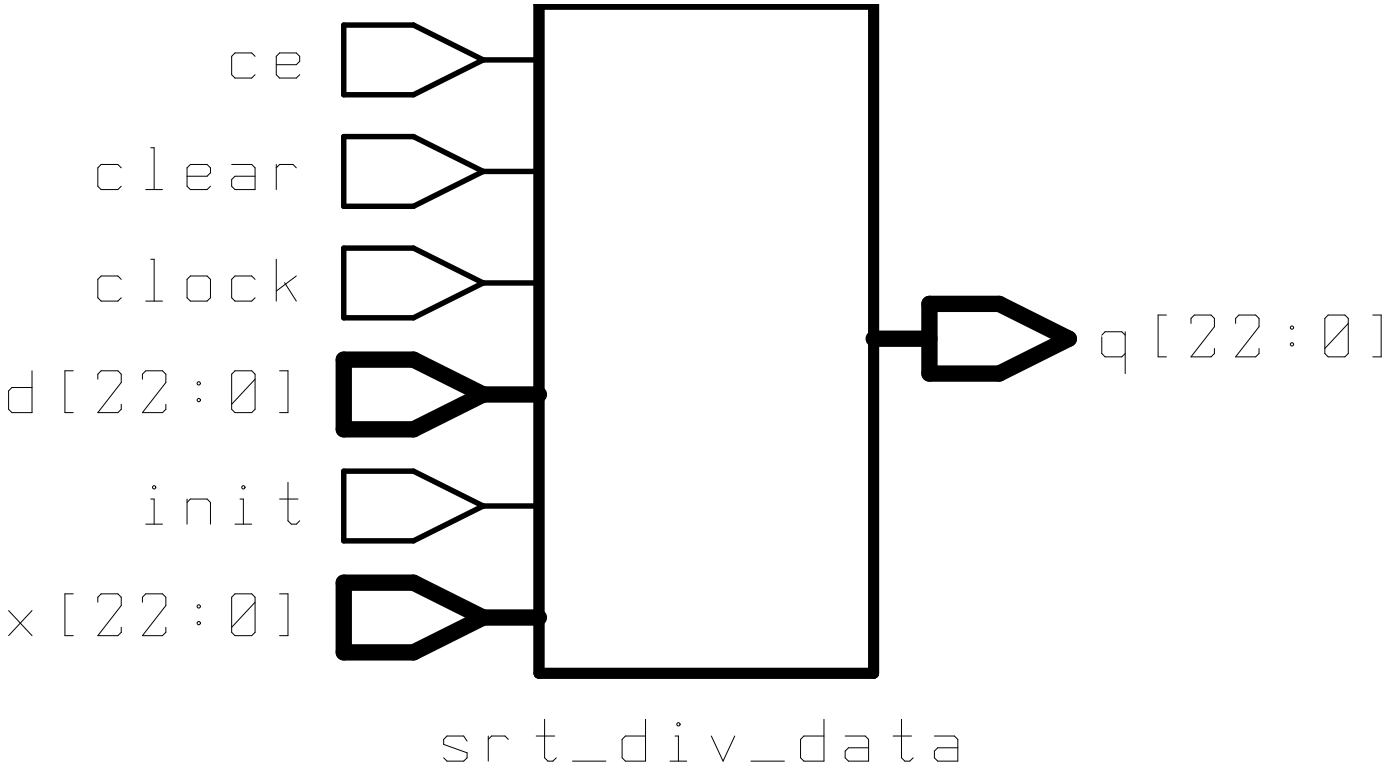
ce
clear
clock
d[22:0]
init
x[22:0]
q[22:0]
srt_div_data